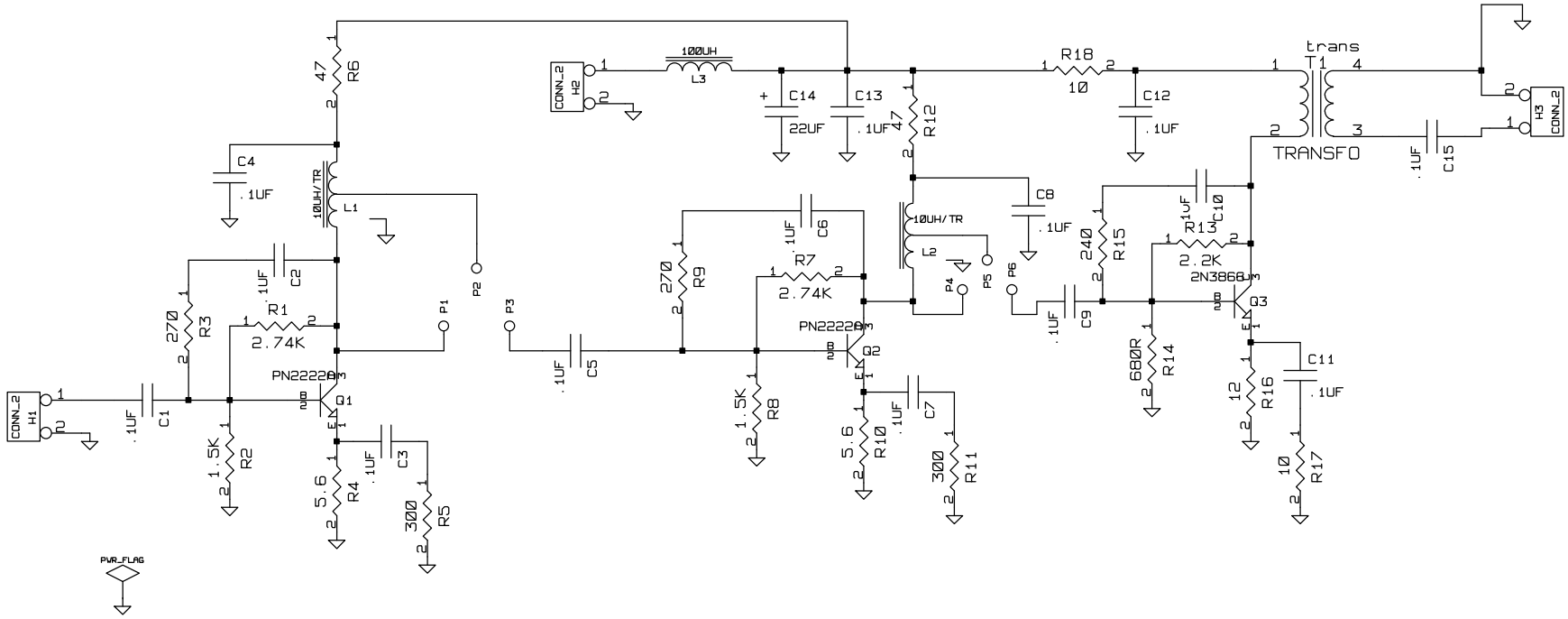

2SC1969 12DB 5W po (it can do more but, we want 5)

2n3866 13DB .32w po (plan for 500mW in case..)

2n3904 17db .016w po (capable of 50mw)

2n3904 18db .0008w po (not even stressed)

Bluebird Originals		
Title: RF Chain		
Size: A	Date: 8 aug 2007	Rev:
KiCad E.D.A. EESchema (2007-09-26)		Sheet: 1/1